VTD 60

Oil Coolers
VT Series

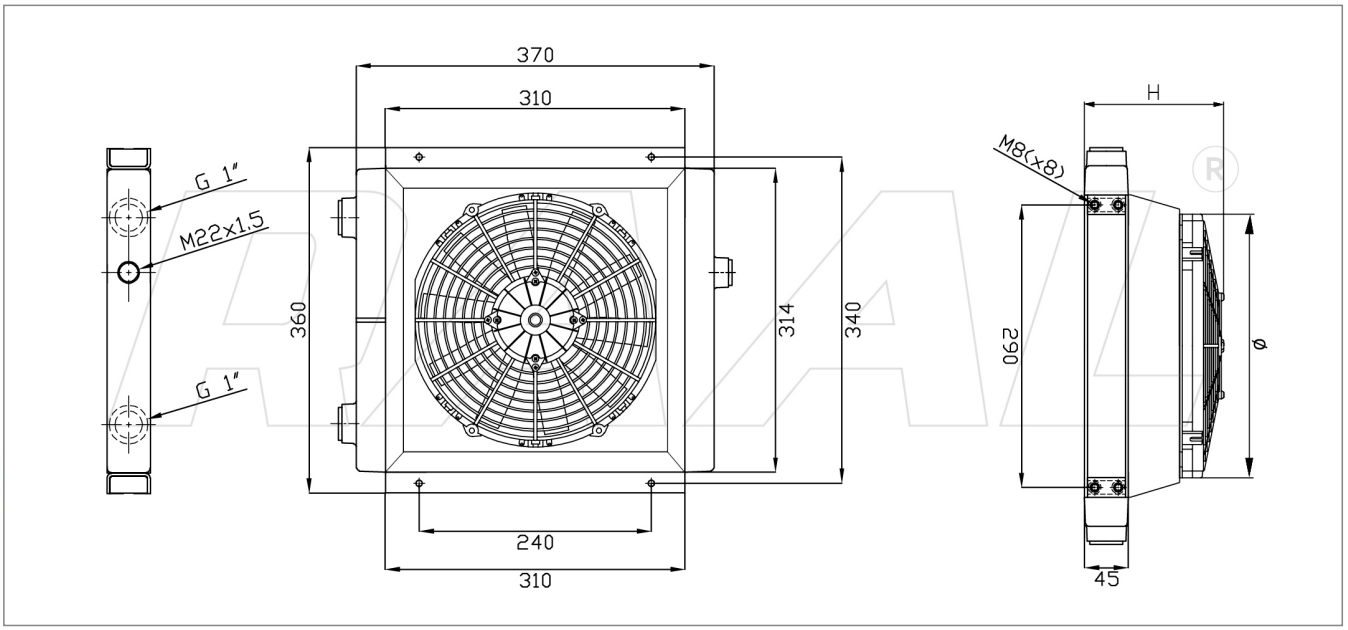

Gamma Oil Coolers

Product Code	Type of Setting	Overall H	Fan diameter	Fan Power m3/h	M.R. dm3	Power Consumpt.
RUV100640000	UNCOVERED	45	-	-	4,47	-
RUV100640011	12V Suct.	210	305	1839	4,47	16,5 A
RUV100640012	12V Blow.	210	305	1736	4,47	14,9 A
RUV100640021	24V Suct.	210	305	2161	4,47	10,3 A
RUV100640022	24V Blow.	210	305	2050	4,47	9,1 A
RUV100640031	230V-50/60Hz Suct.	175	300	3745	4,47	1,55 A
RUV100640032	230V-50/60Hz Blow.	175	300	3745	4,47	1,55 A
RUV100640041	230/400V-50/60Hz 3FN Suct.	175	300	3350	4,47	0,48 A
RUV100640042	230/400V-50/60Hz 3FN Blow.	175	300	3350	4,47	0,48 A
RUV100640051	Pred. Hydraulic. Suct. (Supp. G2)	225	300	3080	4,47	0,41 kW
RUV100640052	Pred. Hydraulic. Blow. (Supp. G2)	225	300	3080	4,47	0,41 kW

Technical Specification

Minimum Range	Kw 9,2 : 10 lt
Maximum Range	Kw 18 : 65 lt

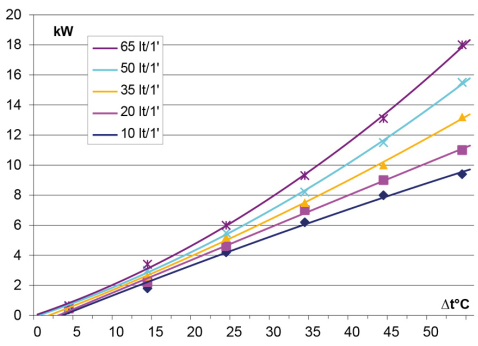

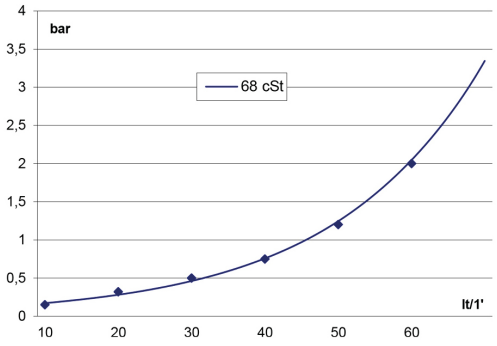

The overall dimensions and the technical characteristics are to be considered indicative, dealing with standarf products in constant evolution.

RAAL ITALIA s.r.l. Via G. Finati, 53 - 44124 Ferrara (ITA) C.F./P.IVA 01650320383
Tel: (+39) 0532.773637 Fax: (+39) 0532.776476 www.raal.it mail:info@raal.it