VTS 180

Oil Coolers
VT Series

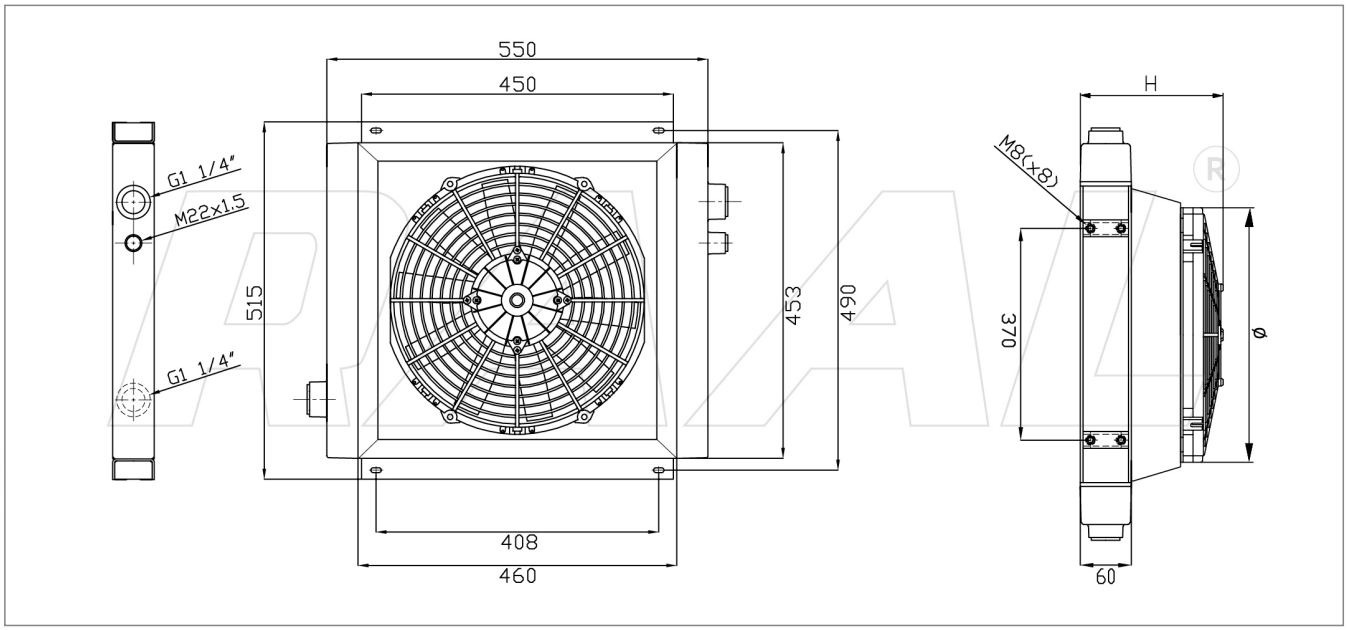

Gamma Oil Coolers

Product Code	Type of Setting	Overall H	Fan diameter	Fan Power m3/h	M.R. dm3	Power Consumpt.
RUV100690000	UNCOVERED	60	-	-	12,50	-
RUV100690011	12V Suct.	225	385	2212	12,50	16,0 A
RUV100690012	12V Blow.	225	385	2412	12,50	16,2 A
RUV100690021	24V Suct.	225	385	2577	12,50	9,3 A
RUV100690022	24V Blow.	225	385	2609	12,50	9,0 A
RUV100690031	230V-50/60Hz Suct.	225	400	4950	12,50	1,06 A
RUV100690032	230V-50/60Hz Blow.	225	400	4950	12,50	1,06 A
RUV100690041	230/400V-50/60Hz 3FN Suct.	225	400	4615	12,50	0,39 A
RUV100690042	230/400V-50/60Hz 3FN Blow.	225	400	4615	12,50	0,39 A
RUV100690051	Pred. Hydraulic. Suct. (Supp. G2)	245	400	7050	12,50	1,5 kW
RUV100690052	Pred. Hydraulic. Blow. (Supp. G2)	245	400	7050	12,50	1,5 kW

Technical Specification

Minimum Range	Kw 11 : 60 lt
Maximum Range	Kw 28 : 200 lt

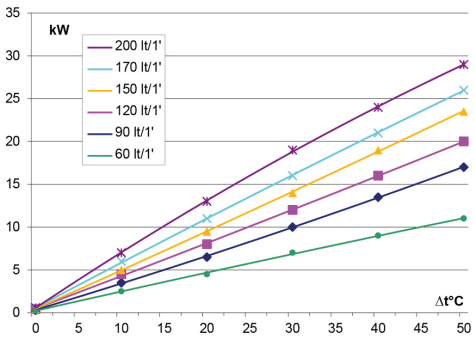

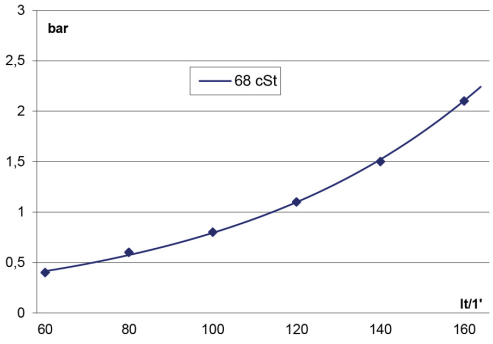

The overall dimensions and the technical characteristics are to be considered indicative, dealing with standarf products in constant evolution.

RAAL ITALIA s.r.l. Via G. Finati, 53 - 44124 Ferrara (ITA) C.F./P.IVA 01650320383
Tel: (+39) 0532.773637 Fax: (+39) 0532.776476 www.raal.it mail:info@raal.it