GRS 130

Oil Coolers
GR S/D Series

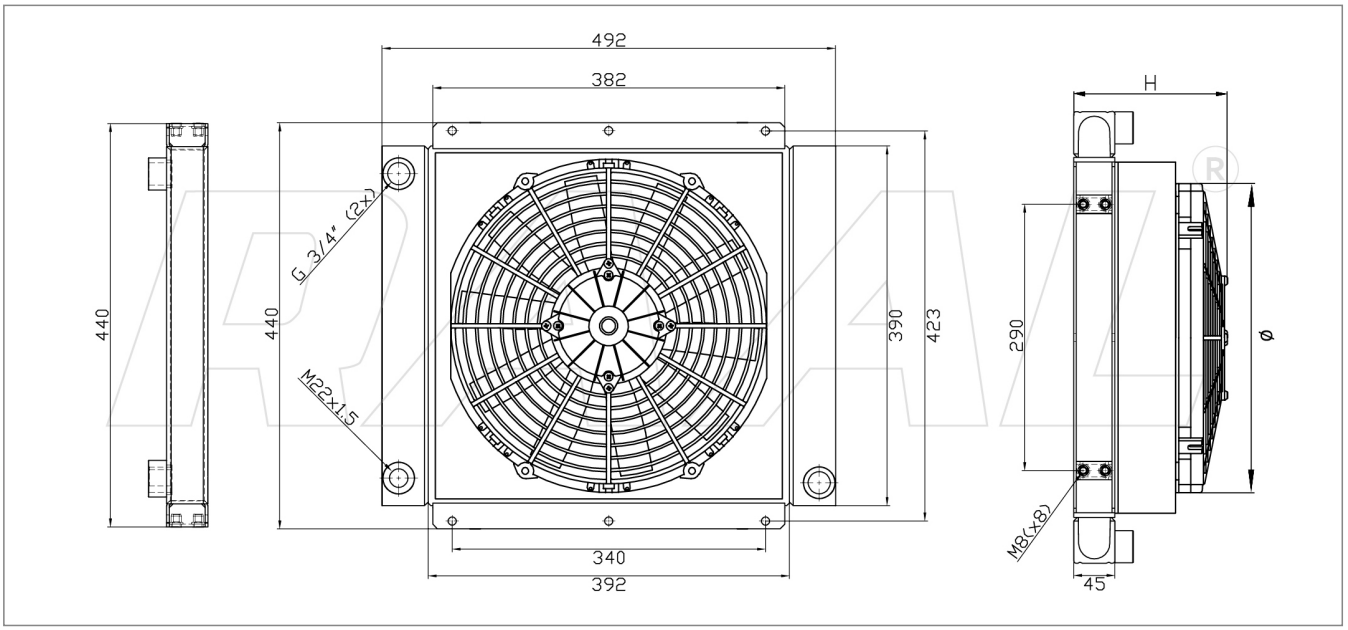

Gamma Oil Coolers

Product Code	Type of Setting	Overall H	Fan diameter	Fan Power m3/h	M.R. dm3	Power Consumpt.
RU0273380000	UNCOVERED	45	-	-	6,90	-
RU0273380011	12V Suct.	210	305	1839	6,90	16,5 A
RU0273380012	12V Blow.	210	305	1736	6,90	14,9 A
RU0273380021	24V Suct.	210	305	2161	6,90	10,3 A
RU0273380022	24V Blow.	210	305	2050	6,90	9,1 A
RU0273380031	230V-50/60Hz Suct.	175	300	3745	6,90	1,55 A
RU0273380032	230V-50/60Hz Blow.	175	300	3745	6,90	1,55 A
RU0273380041	230/400V-50/60Hz 3FN Suct.	175	300	3350	6,90	0,48 A
RU0273380042	230/400V-50/60Hz 3FN Blow.	175	300	3350	6,90	0,48 A
RU0273380051	Pred. Hydraulic. Suct. (Supp. G2)	225	300	3080	6,90	0,41 kW
RU0273380052	Pred. Hydraulic. Blow. (Supp. G2)	225	300	3080	6,90	0,41 kW

Technical Specification

Minimum Range	Kw 8 : 30 lt
Maximum Range	Kw 22 : 140 lt

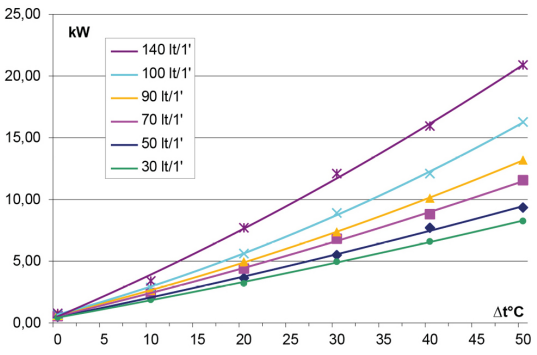

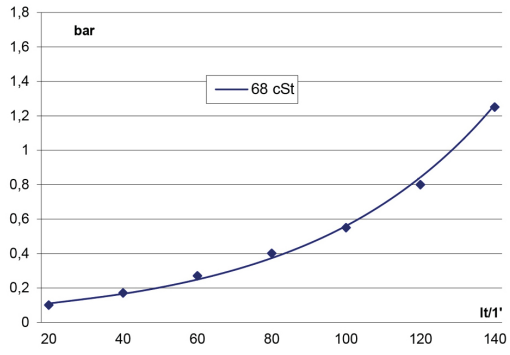

The overall dimensions and the technical characteristics are to be considered indicative, dealing with standarf products in constant evolution.

RAAL ITALIA s.r.l. Via G. Finati, 53 - 44124 Ferrara (ITA) C.F./P.IVA 01650320383
Tel: (+39) 0532.773637 Fax: (+39) 0532.776476 www.raal.it mail:info@raal.it